Attention: pictures for illustrative purposes

## General Data

| | |
|---|---|
| Model: | COMPATTA 4 T/G |
| Code: | 2000031 |
| Series: | Compatta |
| Weight [Kg] | 21.00 |

Submersible pump for sewage with suspended solids

## Hydraulic

| | |
|---|---|
| Impeller Type: | - |
| Delivery DN [mm]: | G 2" |
| Input DN [mm]: | 50 |
| Free Passage [mm]: | 50 |
| Impeller Ø [mm]: | 113 |
| Max Pump Efficiency [%]: | 0.0 |
| Global Efficiency [%]: | -0.04 |
| Head [m]: | 8.34 |
| Flow [m³/h]: | 14.40 |

*Tollerance according to ISO 9906:2012 3B2*

## Features

| | |
|---|---|
| Upper Meccanical seal: | Lips seal |
| Lower Meccanical Seal: | Silicon Carbide/Ceramic/Viton |
| Upper Bearing: | Single raw ball bearing |
| Lower Bearing: | Single raw ball bearing |
| IP Protection: | IP68 |
| Motor protection: | not present |
| Humidity sensor: | not present |
| ATEX: | not present |
| Applied Paint: | Two component water-based paint |
| Cable Length [m]: | 10 |
| Lubricating Oil: | - |
| Oil Quantity [Kg]: | 0.00 |

## Materials

| | |
|---|---|
| Pump: | - |
| Impeller: | - |
| Motor shaft: | - |
| Cooling Jacket: | Not available |
| Screw: | Stainless steel A2-70 |
| Cable: | H07RN8F |

## Pumped Liquid

| | |
|---|---|
| Pumped Liquid: | Sewage |
| Density [Kg/dm³]: | 1.1 |
| pH: | 2023-10-06 |
| Temperature Range: | 0-40°C |

## Installation

| | |
|---|---|
| Maximum depth of immersion [m]: | 20 |
| Cooling Type: | The cooling of the motor is ensured by the surrounding liquid |
| Installation: | |
| Floating on board machine: | present |

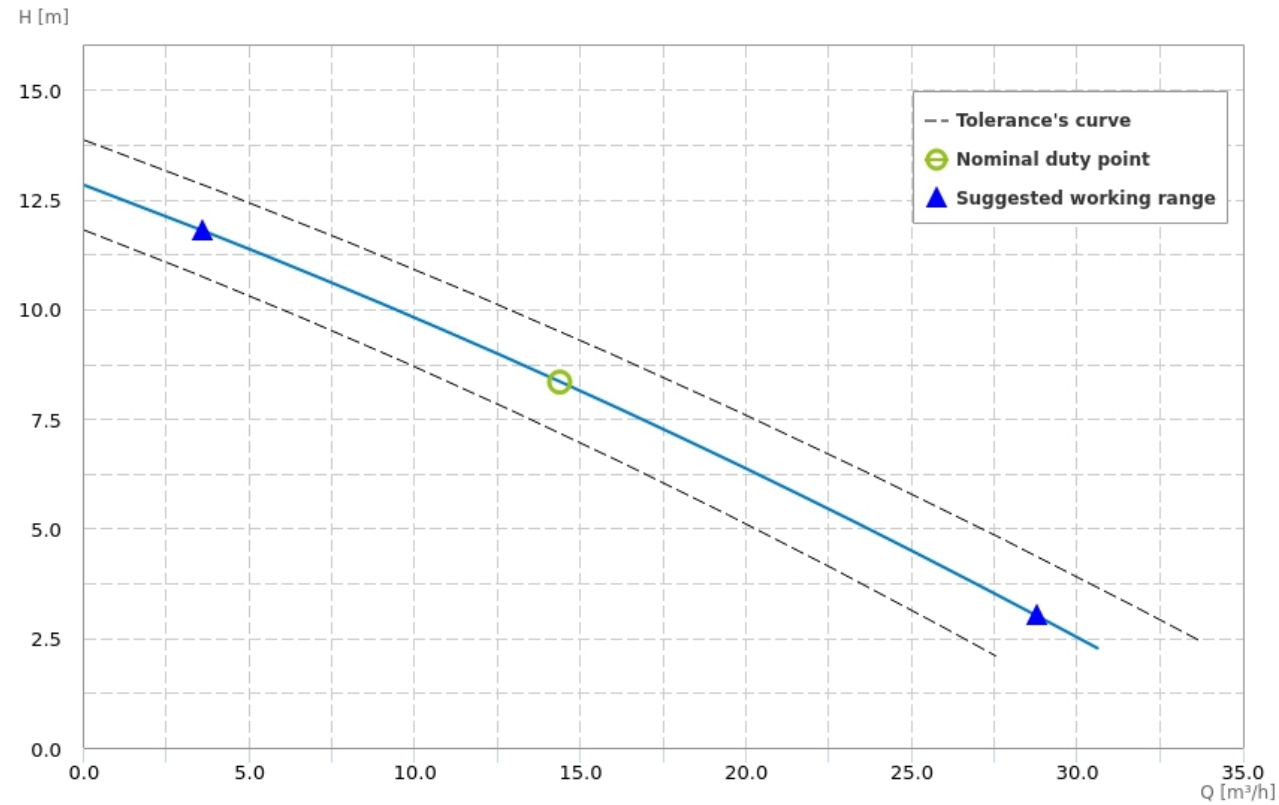
H [m]
15.0
12.5
10.0
7.5
5.0
2.5
0.0
0.0
5.0
10.0
15.0
20.0
25.0
30.0
35.0
Q [m³/h]
Tolerance's curve
Nominal duty point
Suggested working range

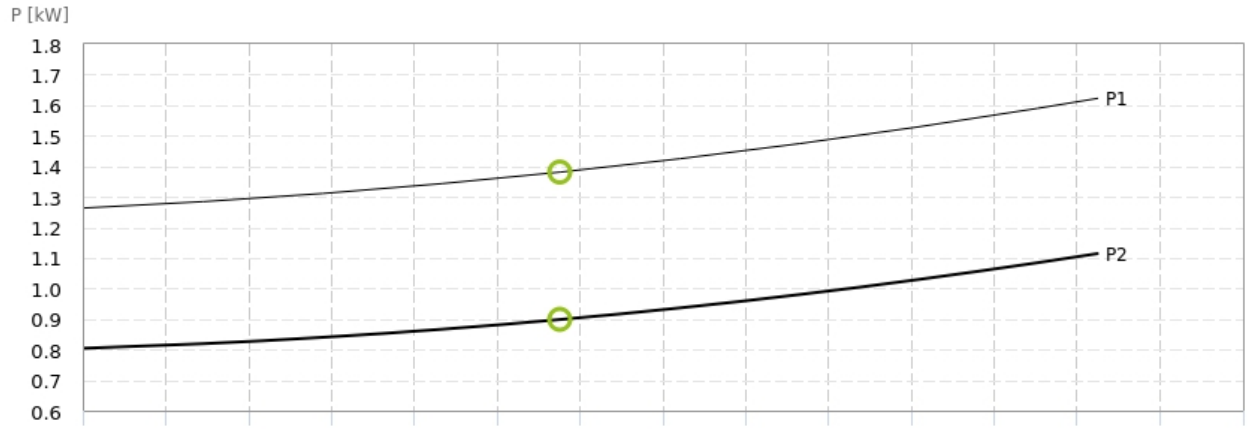
P [kW]
1.8
1.7
1.6
1.5
1.4
1.3
1.2
1.1
1.0
0.9
0.8
0.7
0.6
P1
P2

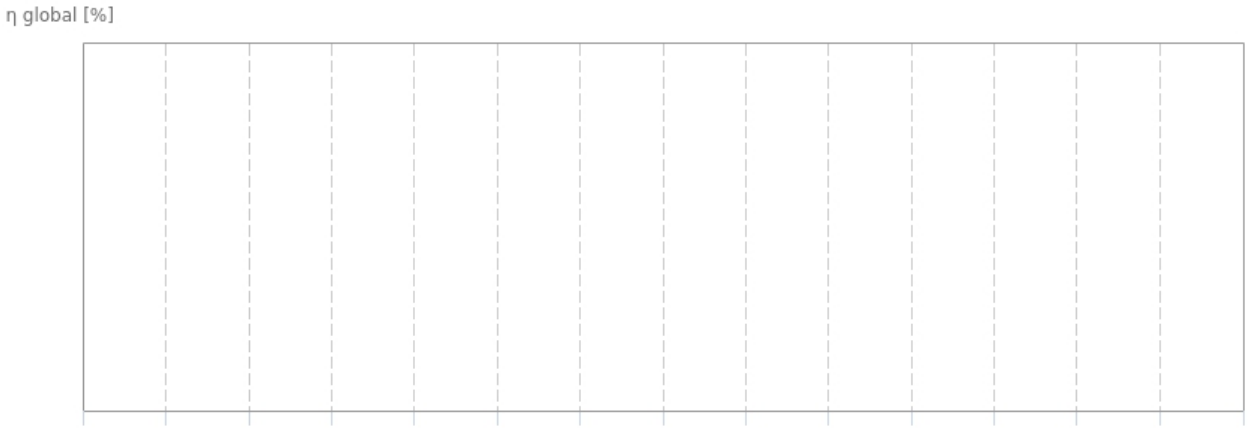
η global [%]

## Motor

| | |
|---|---|
| Motor code: | 3520160220 |
| Power P1 [kW]: | 1.62 |
| Power P2 [kW]: | 1.10 |
| Phases: | 3 |
| Frequency [Hz]: | 50 |
| Tension [V]: | 400 |
| Nominal current [A]: | 2.9 |
| Starting current [%]: | 518.0 |
| Power Factor: | 0.79 |
| R.P.M.: | 2850 |
| Starting: | D.O.L |
| Capacitor [µF]: | 0.0 |
| Insulation Class: | F 155°C |
| Service type: | S2 |
| Max Efficiency [%]: | 79.70 |
| Max Efficiency at full load [%]: | 79.0 |
| Efficiency at ¾ load [%]: | 79.6 |
| Efficiency at ½ load [%]: | 79.6 |
| Efficiency class: | - |

## Wiring diagrams

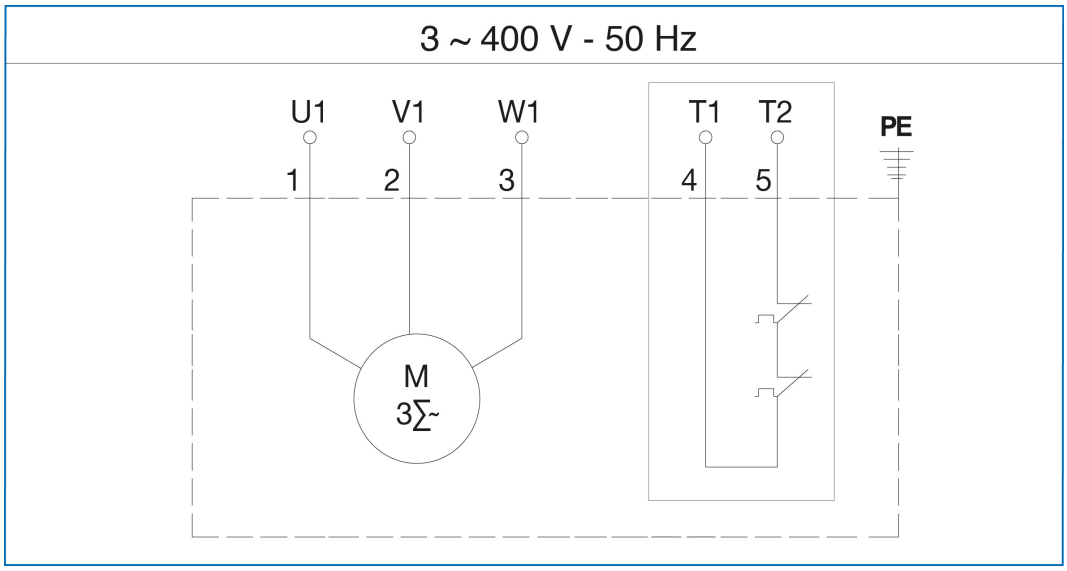
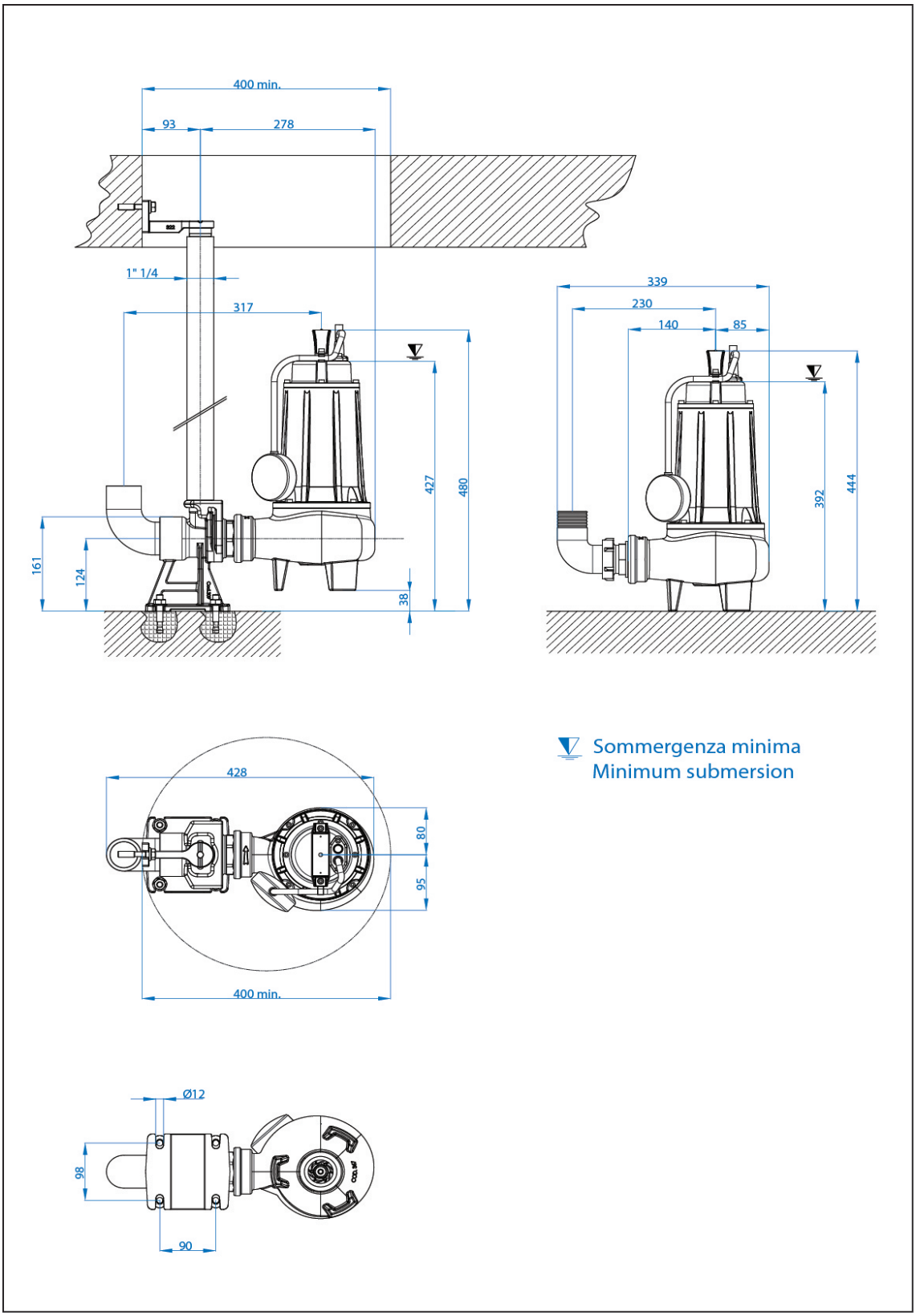
## Dimensions drawing