Attention: pictures for illustrative purposes

General Data

Model:	AT 100/4/173 C.255
Code:	2000170
Series:	A4
Weight [Kg]	103.00

Submersible eletropumps for wastewater including sewage

Hydraulic

Impeller Type:	-
Delivery DN [mm]:	DN100 PN16
Input DN [mm]:	100
Free Passage [mm]:	90
Impeller Ø [mm]:	-
Max Pump Efficiency [%]:	0.0
Global Efficiency [%]:	0.6
Head [m]:	7.41
Flow [m³/h]:	93.60

Tollerance according to ISO 9906:2012 3B2

Features

Upper Meccanical seal:	CA/CE/Viton
Lower Meccanical Seal:	SIC/SIC/Viton
Upper Bearing:	Single raw ball bearing
Lower Bearing:	Double raw ball bearing
IP Protection:	IP68
Motor protection:	present
Humidity sensor:	present
ATEX:	not present
Applied Paint:	Two component water-based paint
Cable Length [m]:	10
Lubricating Oil:	Q8 WF15
Oil Quantity [Kg]:	1.40

Materials

Pump:	-
Impeller:	-
Motor shaft:	-
Cooling Jacket:	Not available
Screw:	Stainless steel A2-70
Cable:	H07RN8F

Pumped Liquid

Pumped Liquid:	Light and lightly sewage
Density [Kg/dm³]:	1.1
pH:	2023-10-06
Temperature Range:	0-40°C

Installation

Maximum depth of immersion [m]:	20
Cooling Type:	The cooling of the motor is ensured by the surrounding liquid
Installation:	
Floating on board machine:	not present

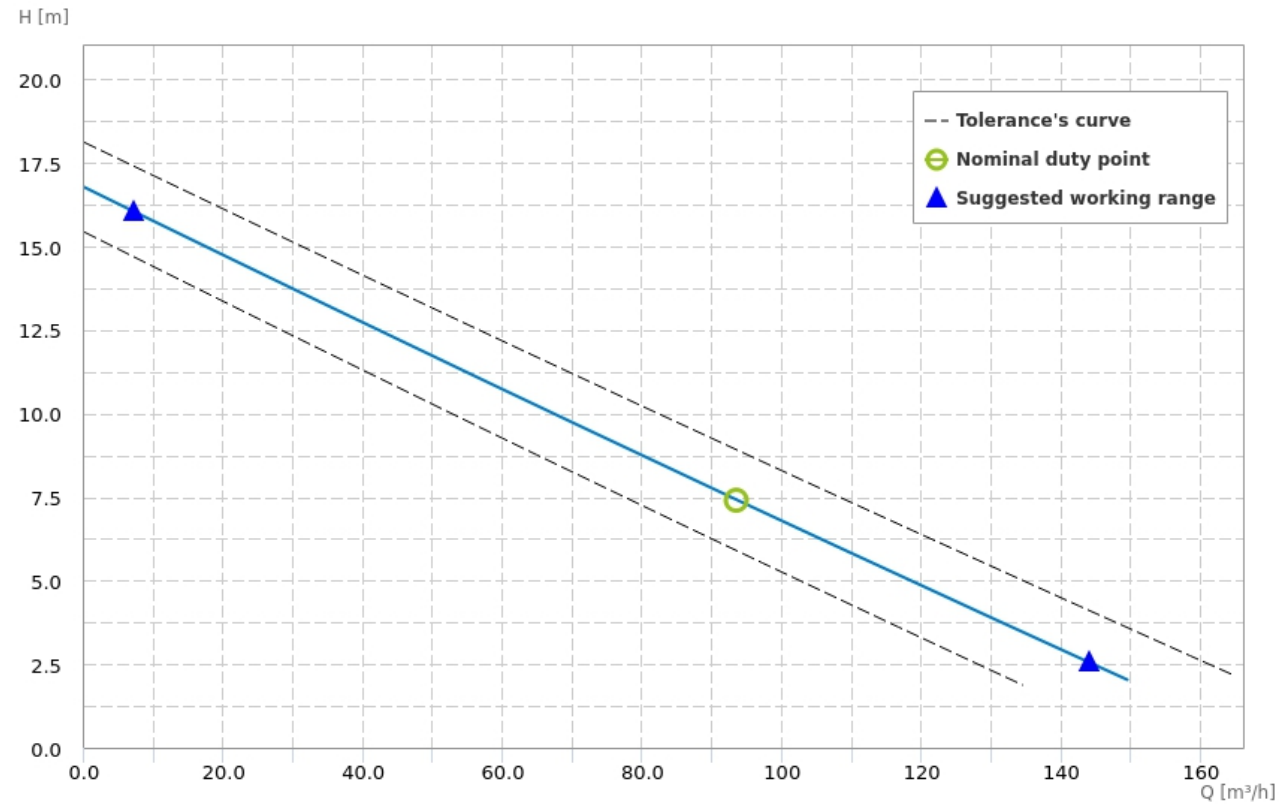
H [m]
20.0
17.5
15.0
12.5
10.0
7.5
5.0
2.5
0.0
0.0
20.0
40.0
60.0
80.0
100
120
140
160
Q [m³/h]
Tolerance's curve
Nominal duty point
Suggested working range

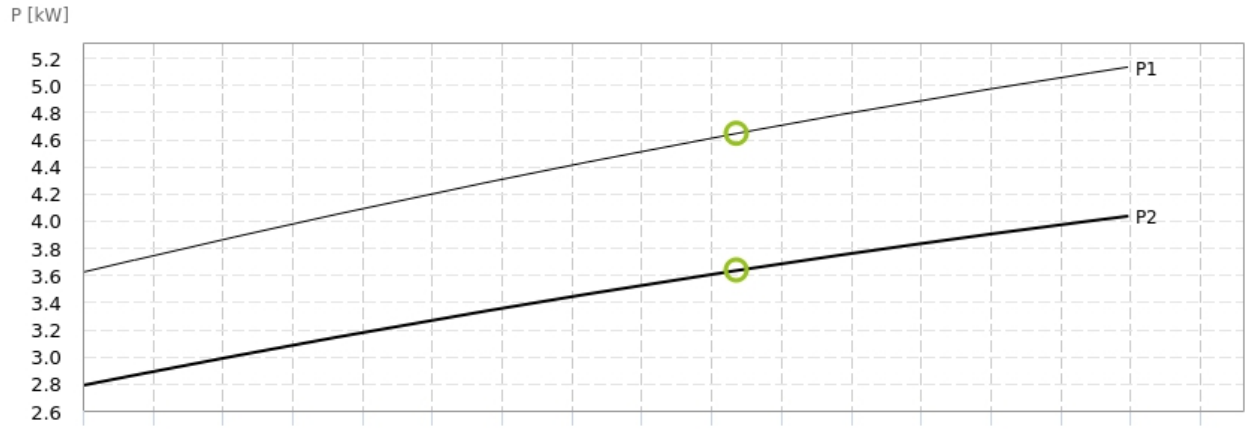
P [kW]
5.2
5.0
4.8
4.6
4.4
4.2
4.0
3.8
3.6
3.4
3.2
3.0
2.8
2.6
P1
P2

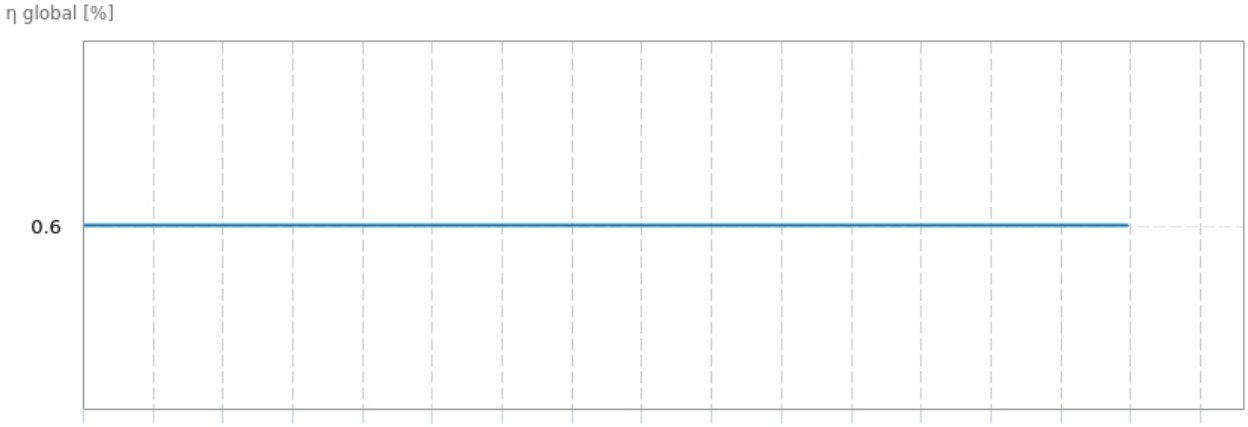
η global [%]
0.6

Motor

Motor code:	3520800215
Power P1 [kW]:	5.10
Power P2 [kW]:	4.00
Phases:	3
Frequency [Hz]:	50
Tension [V]:	400
Nominal current [A]:	9.2
Starting current [%]:	555.0
Power Factor:	0.82
R.P.M.:	1450
Starting:	Y-D
Capacitor [µF]:	0.0
Insulation Class:	F 155°C
Service type:	S1
Max Efficiency [%]:	85.20
Max Efficiency at full load [%]:	84.5
Efficiency at ¾ load [%]:	84.8
Efficiency at ½ load [%]:	84.6
Efficiency class:	IE2

Wiring diagrams

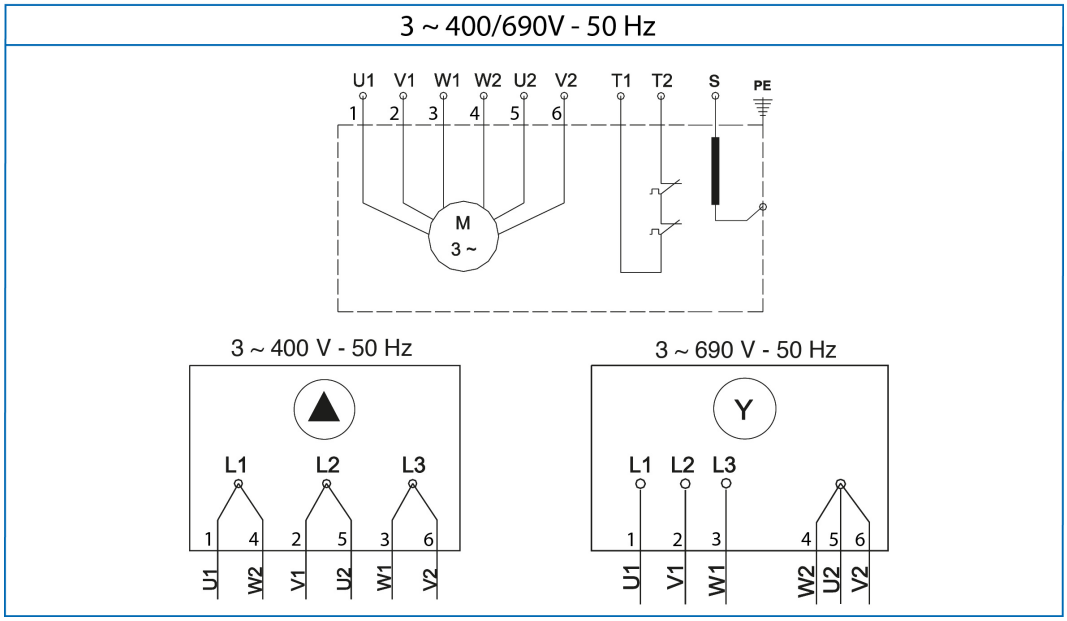
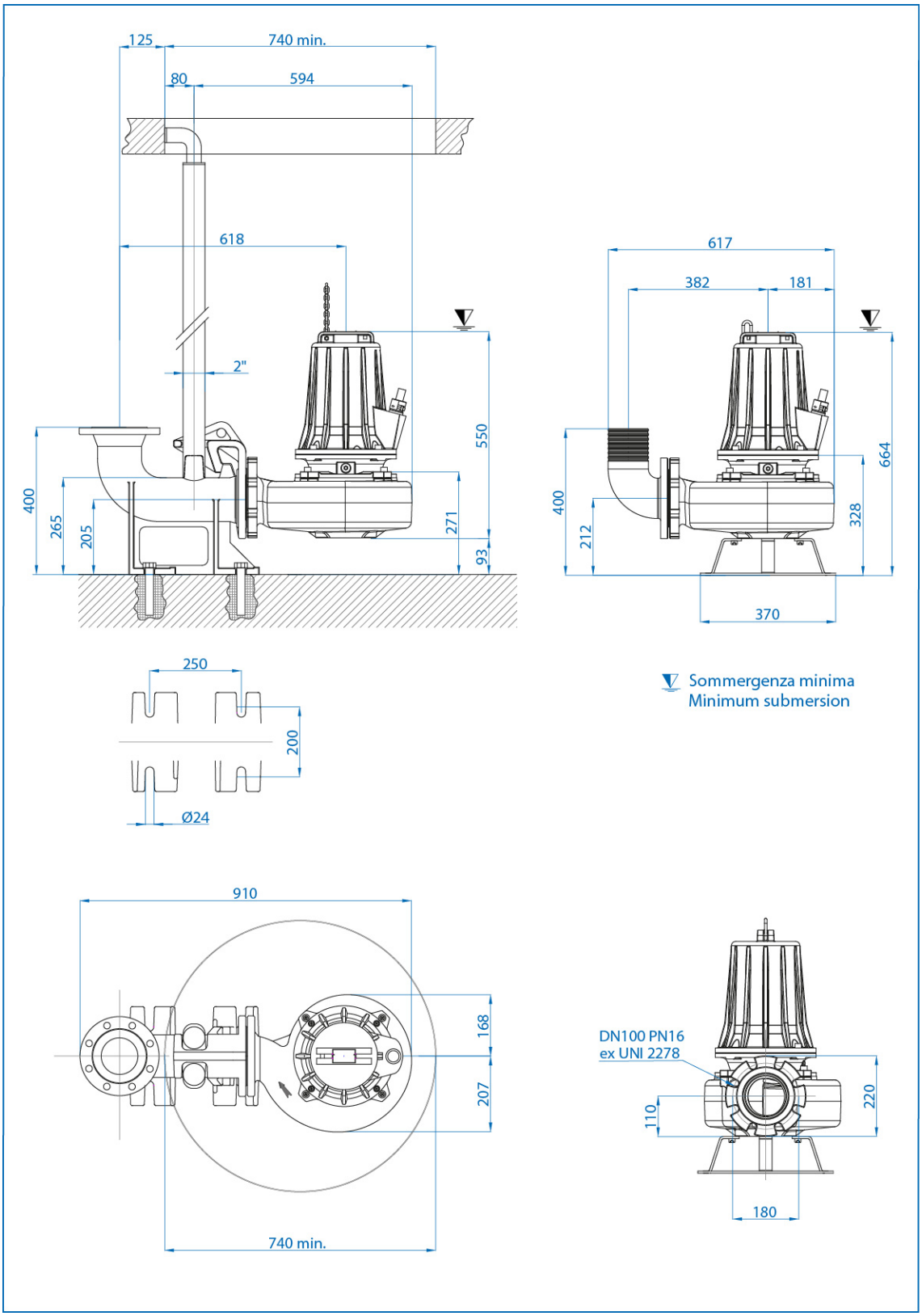
Dimensions drawing