2000178 AT 150/4/173 C.258 400/690V-50Hz

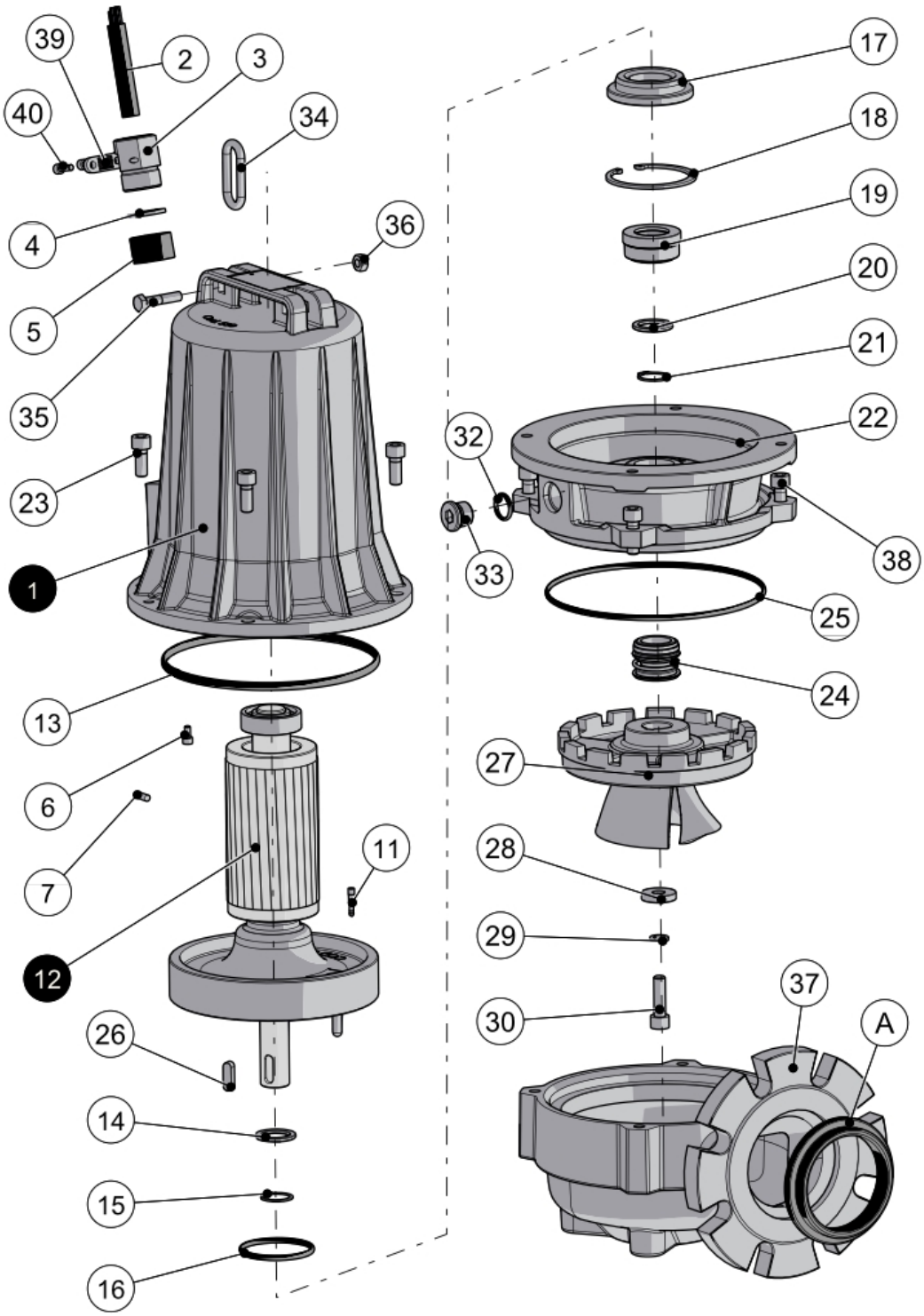

2000178 AT 150/4/173 C.258 400/690V-50Hz

Pos	Code	Description	Pcs
01	6100622136	[+] MOTOR CASING Pack	1
02	08514120	Electric Cable Mt.10 H07RN8-F 7X1,5+3X0,50 Ø19	1
03	06405120	Cable Clamp AISI 416 M38X1.5 cod.404	1
04	06508260	Washer 35x20,5 Sp.2 Cod.197	1
05	07316130	Cable Grommet Cod.398C 19x36 H22	1
06	07007160	Screw UNI 5931 M5x10 A2	1
07	08201120	Terminal blue cap NL 06-PB S.1,5-2,5	2
07	08201110	Terminal white cap NL 06-P S.1,5-2,5	6
11	08202100	Connector RF-BM4 Ø4	1
12	6010666035	[+] MOTOR SHAFT Pack	1
13	07211500	Oring 6795 202,57x5,33 NBR	1
14	06001160	AVP ring 30,1x40x3 Cod.623	1
15	06100200	Seeger UNI 7435 Ø30	1
16	07210340	Oring 174 71,44x3,53 NBR	1
17	32806310	Bearing Locking Ring cod.631	1
18	06100580	Seeger UNI 7437 Ø85	1
19	10011225	Mechanical Seal Carbon/Ceramic BT PR/AR Ø30	1
20	06001160	AVP ring 30,1x40x3 Cod.623	1
21	06100200	Seeger UNI 7435 Ø30	1
22	33606070	Motor Holder cod.607N	1
23	07007760	Screw UNI 5931 M12x30 A2	4
24	07508150	Mechanical seal SIC/SIC/Viton EMG1/30/G6	1
25	07211280	Oring 4975 247,25x3,53 NBR	1
26	06406240	Key Shaft UNI 6604 A 8x7x30 h9 A2	1
27	43006340	Single channel impeller cod.634	1
28	06508120	Washer 12,5x35x6 Cod. 624 AISI 416	1
29	06605170	Washer Grower UNI 1751 M12 A2	1
30	07007780	Screw UNI 5931 M12x35 A2	1
31	09210100	OIL Q8 WF15	1
32	07210184	ORING 128 20,62x2,62 NBR	1
33	06700100	Oil Cap 1/2' GAS DIN 908 cod. 490	1
34	06002120	Chain Ring 14x28x62 COD. 191	1
35	07007560	Screw UNI 5931 M8x40 A2	1
36	06206100	Self locking Nut UNI 7474 M8	1
37	31806320	Body pump DN 150 Cod. 632	1
38	07007760	Screw UNI 5931 M12x30 A2	4
39	06404160	Cable Gland Tab cod.407	1
40	07007240	Screw UNI 5931 M5X20 A2	2
A	07204160	Gasket seal DN150 cod.725	1

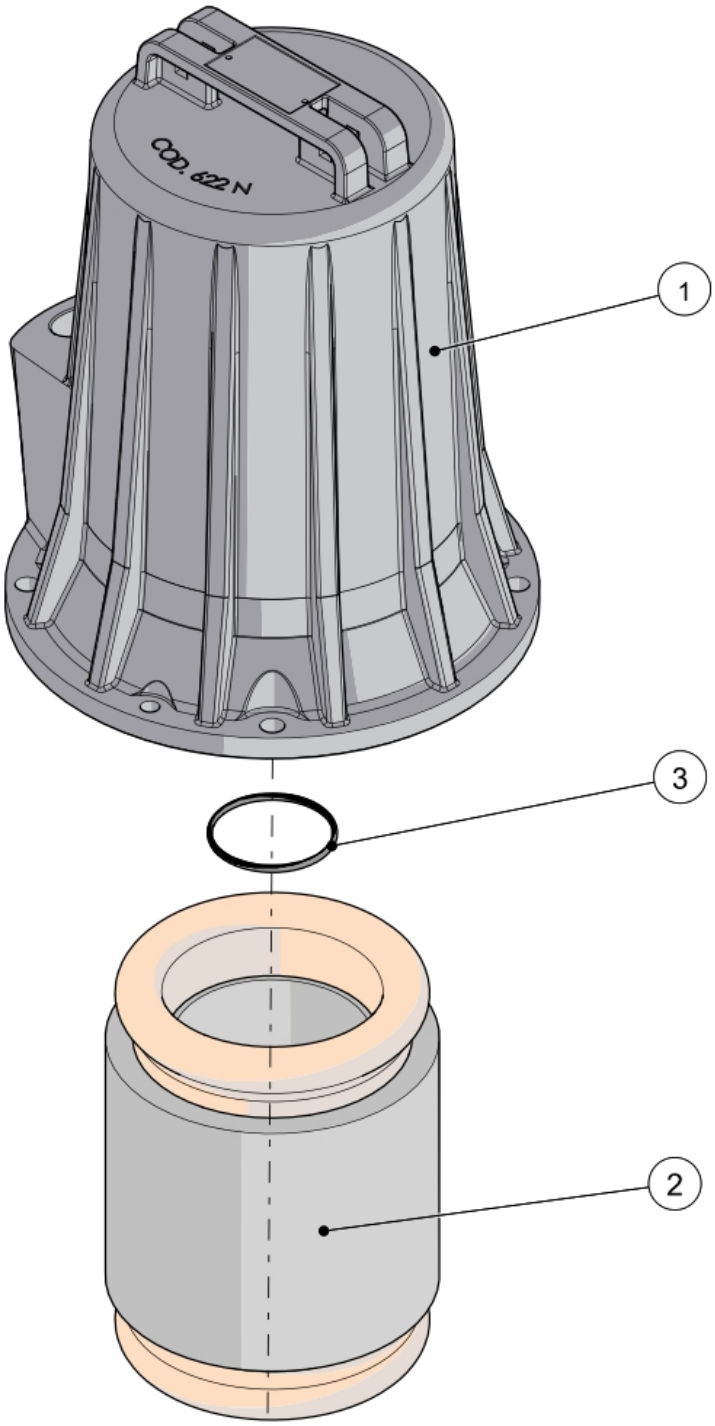
COD. 622 N
1
3
2

6100622136 [+] MOTOR CASING Pack

Pos	Code	Description	Pcs
01	51006221	Motor casing cod.622N	1
02	3520840215	Stator 173x103 H150 TF. V400/690 - 50Hz - 4 Poles	1
03	07210300	Oring 165 61,90x3,53 NBR	1

6010666035 [+] MOTOR SHAFT Pack

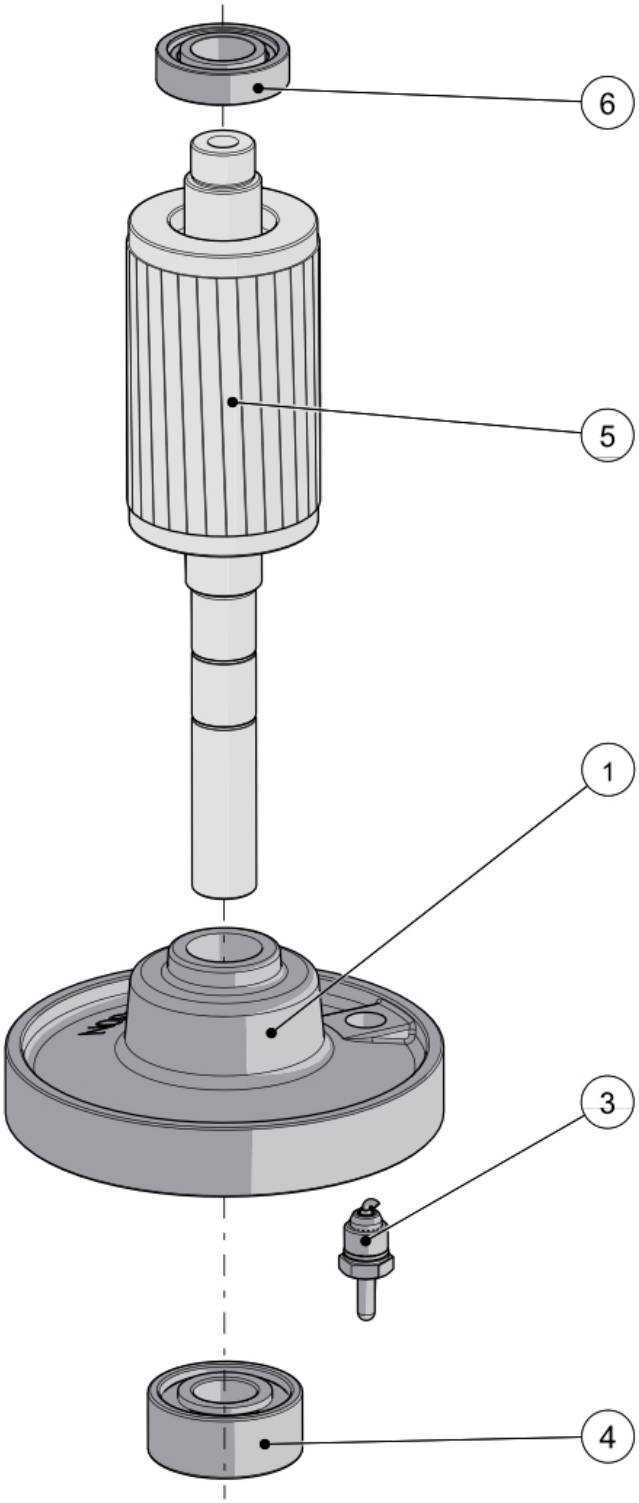

6010666035 [+] MOTOR SHAFT Pack

Pos	Code	Description	Pcs
01	33406300	Intermediate flange cod.630N	1
03	6250222010	Seal Leak Detector with Oring	1
04	07703160	Bearing cod.3306B-2ZRTNG	1
05	4010666035	Motor Shaft (cod.666) + Rotor (103x36 H150)	1
06	07706520	Bearing cod.6206-ZZCMDNS7S6	1